RoHS Compliant

THIS DRAWING CONTAINS INFORMATION THAT IS PROPRIETARY TO WITAREA TECHNOLOGY, AND SHOULD NOT BE USED WITHOUT WRITTEN PERMISSION

REV	ECN No.	DATE	REMARK
A	NEW	2020.10.15	NEW RELEASE

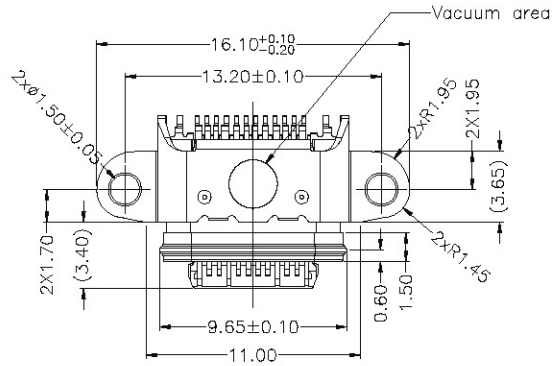

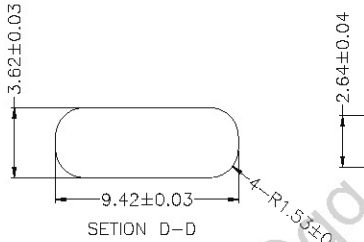

SETION D-D

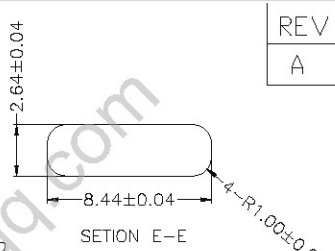

SETION E-E

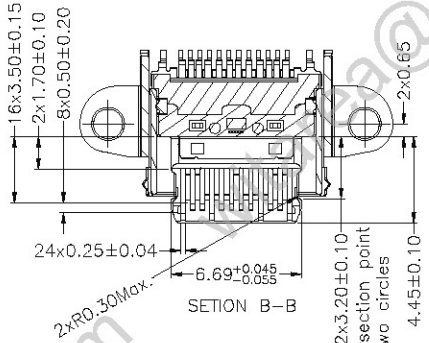

SETION B-B

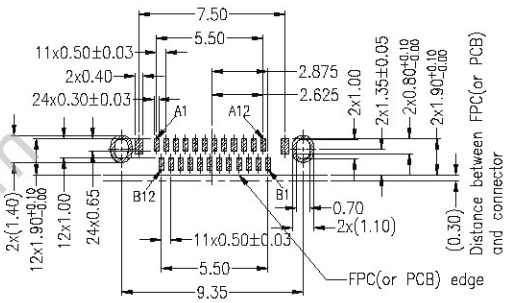

RECOMMENDED PCB LAYOUT
DEFAULT TOLERANCE:±0.05

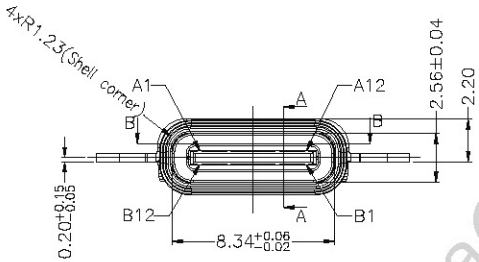

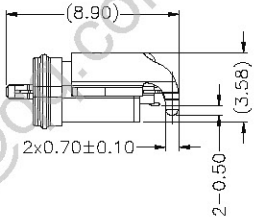

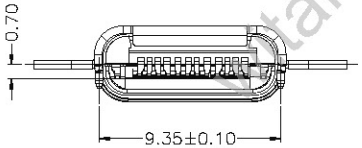

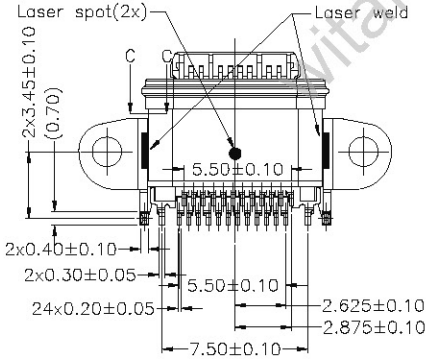

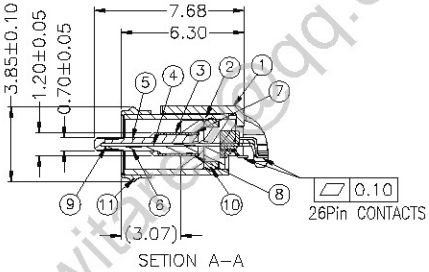

SETION A-A

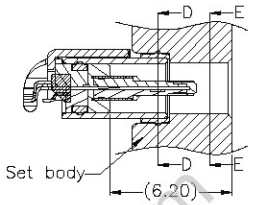

RECOMMENDED SET BODY SIDE HOLE SHAPE

Item	Title	Material	Dispose
1	Frame	Stainless Steel, T=0.40	Ni:40u" Min.
2	Shell	Stainless Steel, T=0.30	Ni:40u" Min.
3	GND Plate	Stainless Steel, T=0.10	None
4	Mid Plate	Stainless Steel, T=0.15	Ni 40u"Min.+Solder area:Au 1u"Min.
5	Top Contact	Copper Alloy, T=0.12	Mating Area: Ni 80u"+Au 15u" Min.
6	Bottom Contact	Copper Alloy, T=0.12	Solder Tails: Ni 80u"+Au 1u" Min.
7	Housing A	High Temperature Plastic	UL 94V-0/Black
8	Housing B	High Temperature Plastic	UL 94V-0/Black
9	Housing C	High Temperature Plastic	UL 94V-0/Black
10	Rubber(O-ring)	Si	Red
11	Rubber	Si	Black

Remark:
1.The waterproof grade is IPX8.
2.PIN DEFINITION:(Some GND pins(A1,A12,B1,B12) and Mid Plate may connect together.)

	A1	A2	A3	A4	A5	A6	A7	A8	A9	A10	A11	A12
Mid Plate	GND	TX1+	TX1−	VBus	CC1	D+	D−	SBU1	VBus	RX2−	RX2+	GND
	GND	RX1+	RX1−	VBus	SBU2	D−	D+	CC2	VBus	TX2−	TX2+	GND
	B12	B11	B10	B9	B8	B7	B6	B5	B4	B3	B2	B1

PART NO.:
SEE THE PART NUMBER CODE

GENERAL TOLERANCES (UNLESS SPECIFIED)

X.XXXX	± ---
X.XXX	± 0.10
X.XX	± 0.25
X.X	± 0.30
ANGULAR	± --°

QUALITY SYMBOL

深圳市纬域科技有限公司
SHENZHEN WITAREA TECHNOLOGY CO.,LTD

TITLE
TYPE C 3.1/3.2 24PIN RECEPTACLE ,MID-MOUNT, DUAL ROW SMT, CH=0.7MM,L=7.52MM, IP68 WATERPROOF

DWG.NO. W0026-24-MM1-W5
SHEET NO. 1 OF 1
DIMENSION STYLE MM ONLY
DESIGN UNITS METRIC
SCALE 1:1

	DATE
DRAWN BY ANDY YANG	2022.05.31
CHECKED BY JAMES XIAO	2022.05.31
APPROVED BY JASON ZENG	2022.05.31

THIRD ANGLE PROJECTION

frame size: A4

witarea@qq.com