RoHS Compliant

THIS DRAWING CONTAINS INFORMATION THAT IS PROPRIETARY TO WITAREA TECHNOLOGY, AND SHOULD NOT BE USED WITHOUT WRITTEN PERMISSION

REV	ECN No.	DATE	REMARK
A	NEW	2020.09.01	NEW RELEASE

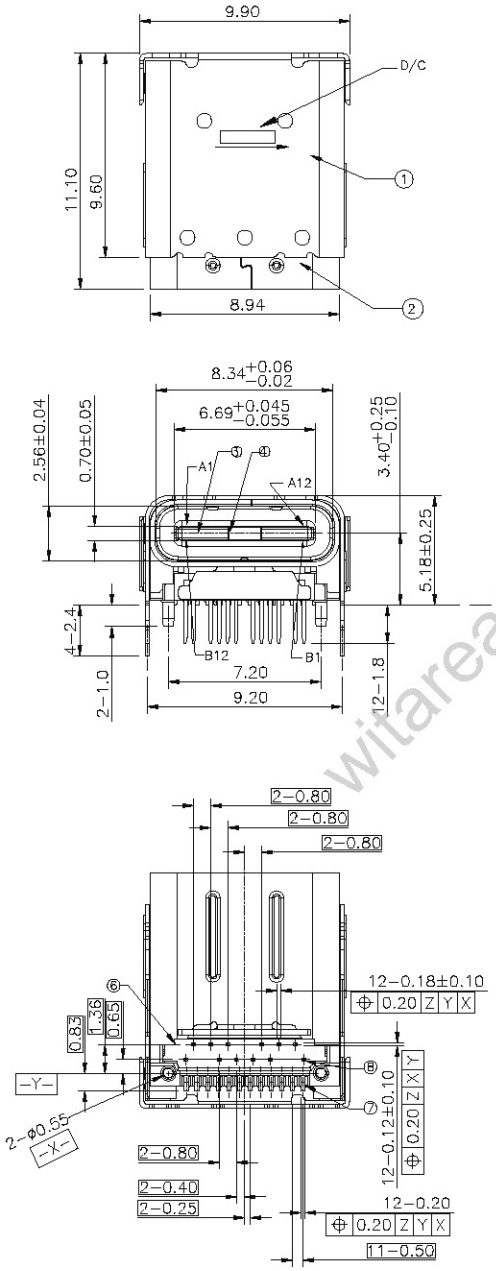

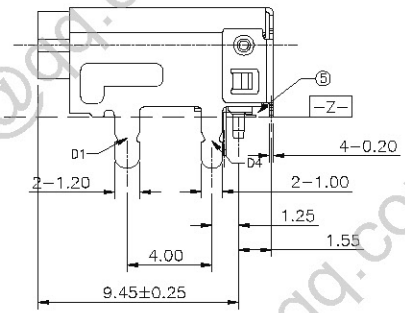

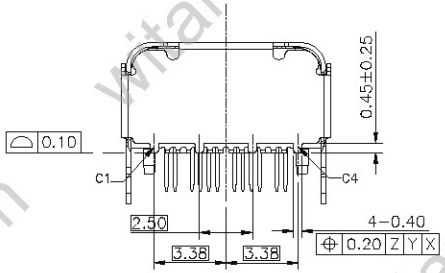

NOTES :

1. ELECTRICAL CHARACTERISTIC:
   - 1−1: CONTACT CURRENT RATING: VBUS AND GND CONTACTS RATED AT 1.25A EA., PARALLELED FOR A TOTAL OF 5A.
   - 1−2: LOW LEVEL CONTACT RESISTANCE: 40 MILLIOHMS MAX. FOR VBUS ,GND AND OTHER CONTACTS. 50 MILLIOHMS MAX. AFTER ENVIRONMENT TEST.
   - 1−3: DIELECTRIC WITHSTANDING VOLTAGE: 100VAC (RMS)MIN.
   - 1−4: INSULATION RESISTANCE: 100 MEGOHMS MIN.
2. MECHANICAL CHARACTERISTIC:
   - 2−1: INSERTION FORCE: 5~20N .
   - 2−2: EXTRACTION FORCE: 8~20 N UP TO 1,000 MATING CYCLES, 6~20 N AFTER 1000 DURABILITY CYCLES.
   - 2−3: DURABILITY: 10000 CYCLES.
   - 2−4: OPERATING TEMPERATURE: −55°C ~ +85°C.
3. MEET USB TYPE C STANDARD SPECIFICATION.
4. DIMENSIONS ARE IN MILLIMETERS, BRACKETED DIMENSIONS ARE INCHES EQUIVALENTS.
5. RECOMMENDED PROCESS: IR REFLOW 260°C, 10SECONDS.
6. THE CONNECTOR COMPLIANT TO ROHS AND HALOGEN FREE .
7. THE CONNECTOR It conforms to the high frequency characteristic requirements of GNE2(10G) .

NO.	DESCRIPTION	QTY.	MATERIAL	TREATMENT
⑧	UPPER CONTACT	12	COPPER ALLOY	NICKEL UNDERPLATING OVERALL; SELECTIVE GOLD Plated AT CONTACT AREA; LEAD FREE TIN ALLOY PLATED AT TERMINATION.
⑦	LOWER CONTACT	12		
⑥	LOWER IM	1	THERMOPLASTIC UL 94V−0	MOLDED COLOR: BLACK.
⑤	UPPER IM	1	THERMOPLASTIC UL 94V−0	MOLDED COLOR: BLACK.
④	CENTER IM	1	THERMOPLASTIC UL 94V−0	MOLDED COLOR: BLACK.
③	SHIELD PLATE	1	STAINLESS STEEL	NICKEL PLATING AT OVER ALL.
②	INNER SHELL	1	STAINLESS STEEL	CLEAN
①	OUTER SHELL	1	STAINLESS STEEL	NICKEL PLATING ONLY AT TAIL, Au AT TABS AND SOLDER TAIL.

PART NO.: SEE THE PART NUMBER CODE

深圳市纬域科技有限公司
SHENZHEN WITAREA TECHNOLOGY CO.,LTD

QUALITY SYMBOL	GENERAL TOLERANCES (UNLESS SPECIFIED)	
▶	X.XXXX	± ---
	X.XXX	± 0.10
	X.XX	± 0.20
	X.X	± 0.30
	ANGULAR	± --°

TITLE: TYPE C 3.1/3.2 24PIN RECEPTACLE , TOP−MOUNT , DIP+SMT, WITH BRACKET ,CH=3.4MM, L=11.1MM

DRAWN BY: ANDY YANG	DATE: 2020.09.01	
CHECKED BY: JAMES XIAO	DATE: 2020.09.01	
APPROVED BY: JASON ZENG	DATE: 2020.09.01	
DWG.NO.: W0026-24-TM3-S31	SHEET NO.: 1 OF 2	
DIMENSION STYLE: MM ONLY	DESIGN UNITS: METRIC	SCALE: 1:1

THIRD ANGLE PROJECTION

frame size: A4

witarea@qq.com

RoHS Compliant

THIS DRAWING CONTAINS INFORMATION THAT IS PROPRIETARY TO WITAREA TECHNOLOGY, AND SHOULD NOT BE USED WITHOUT WRITTEN PERMISSION

REV	ECN No.	DATE	REMARK
A	NEW	2020.09.01	NEW RELEASE

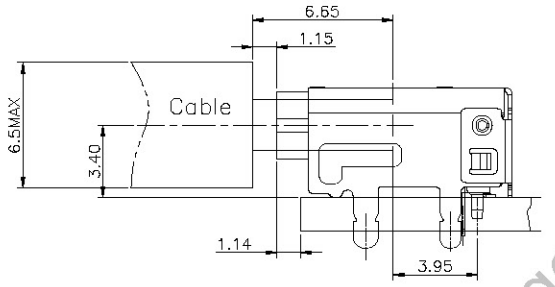

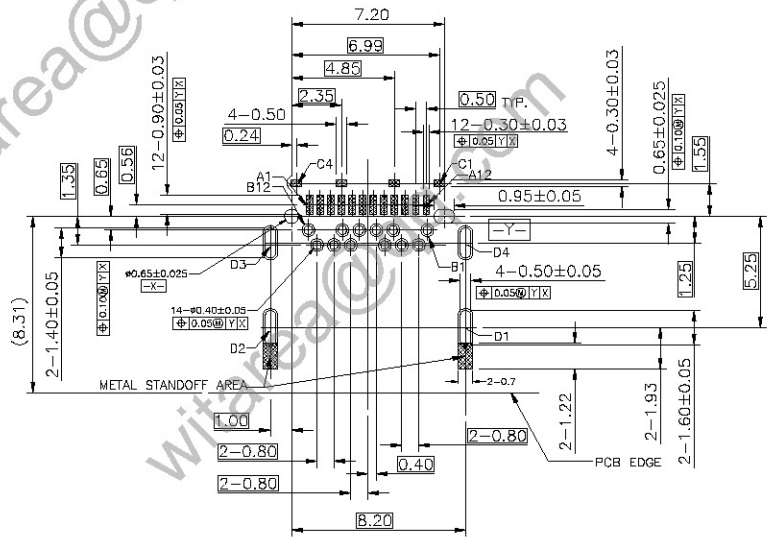

RECOMMENDED P.C.B LAYOUT (COMPONENT SIDE)

PCB THICKNESS: 1.60±0.05[.063±.002]mm
DEFAULT TOLERANCE: ±0.05[.002]

Pin No.	Signal Name	Pin No.	Signal Name
A1	GND	B12	GND
A2	SSTXp1	B11	SSRXp1
A3	SSTXn1	B10	SSRXn1
A4	VBUS	B9	VBUS
A5	CC1	B8	SBU2
A6	Dp1	B7	Dn2
A7	Dn1	B6	Dp2
A8	SBU1	B5	CC2
A9	VBUS	B4	VBUS
A10	SSRXn2	B3	SSTXn2
A11	SSRXp2	B2	SSTXp2
A12	GND	B1	GND

PART NO.: SEE THE PART NUMBER CODE

QUALITY SYMBOL: ▶ = 0 ▽= 0

GENERAL TOLERANCES (UNLESS SPECIFIED)	
X.XXXX	± ---
X.XXX	± 0.10
X.XX	± 0.20
X.X	± 0.30
ANGULAR	± --°

深圳市纬域科技有限公司
SHENZHEN WITAREA TECHNOLOGY CO.,LTD

TITLE: TYPE C 3.1/3.2 24PIN RECEPTACLE , TOP-MOUNT , DIP+SMT, WITH BRACKET ,CH=3.4MM, L=11.1MM

DWG.NO. W0026-24-TM3-S31

SHEET NO. 2 OF 2

DIMENSION STYLE: MM ONLY

DESIGN UNITS: METRIC

SCALE: 1:1

	DATE
DRAWN BY: ANDY YANG	2020.09.01
CHECKED BY: JAMES XIAO	2020.09.01
APPROVED BY: JASON ZENG	2020.09.01

THIRD ANGLE PROJECTION

frame size: A4

witarea@qq.com