REV	ECN No.	DATE	REMARK
A	NEW	2020/07/12	NEW RELEASE
B	---	2023.07.24	变更新料号
C	---	2023.08.16	改善

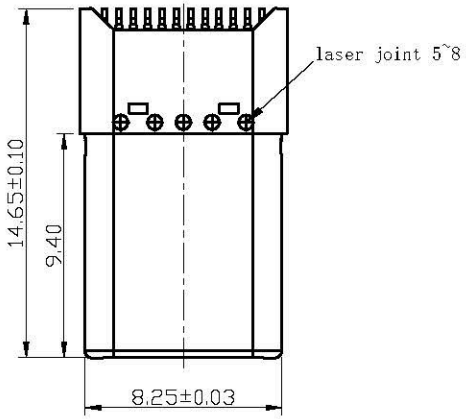

NOTE:
1.ELECTRICAL PERFORMANCE,
1-1. CURRENT RATING:5 AMPS. FOR TOTAL VBUS/GND PINS;
1.25AMPS FOR CC PIN,0.25 AMPS.
FOR ALL OTHER CONTACT.
1-2. VOLTAGE RATING:20V DC/AC (RMS. MAX)
1-3. LLCR:.
VBUS & GND PINS AND OTHER PINS: 40MΩ/PIN MAX.
SHIELD:50MΩ/MAX.
LLCR MAX. CHANGE OF ALL PINS: 10MΩ.
1-4.INSULATION RESISTANCE: 100MΩ MIN
1-5.DIELECTRIC WITHSTAND VOLTAGE,AC 100V FOR 1 MINUTE.
2.MECHANICAL PERFORMANCE,
2-1.INSERTION FORCE: 5~20N.
2-2.EXTRACTION FORCE: 8~20N.
2-3.DURABILITY: 10000 CYCLES.
3.ENVIRONMENTAL PERFORMANCE:
OPERATING TEMPERATURE: -30°C~+85°C.
4.IR REFLOW:
THE PEAK TEMPERATURE ON THE BOARD SHALL BE MAINTAINED FOR 10 SECONDS AT 260°C.
5.COMPLIANCE WITH ROHS REQUIREMENTS.
6.SALT SPRAY:48H

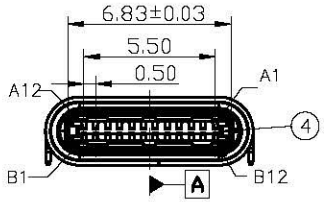

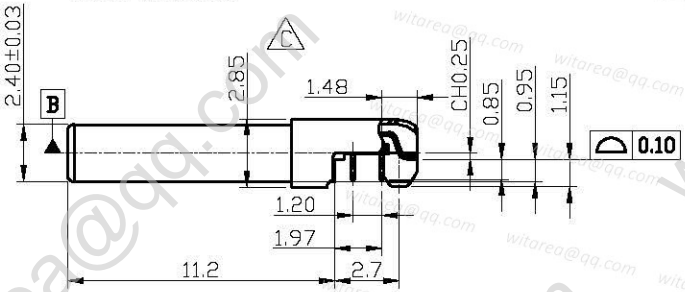

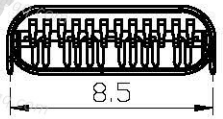

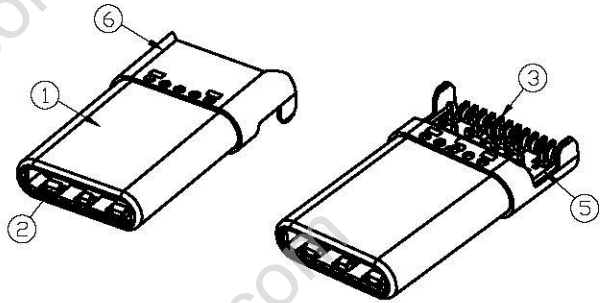

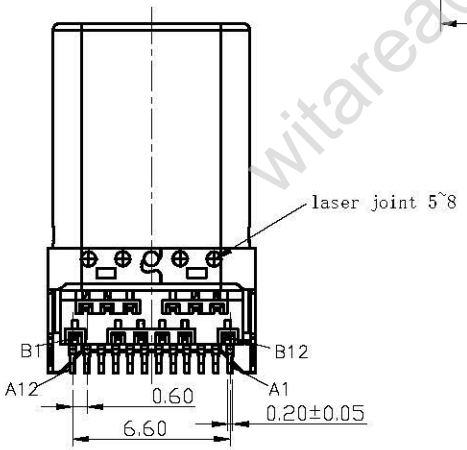

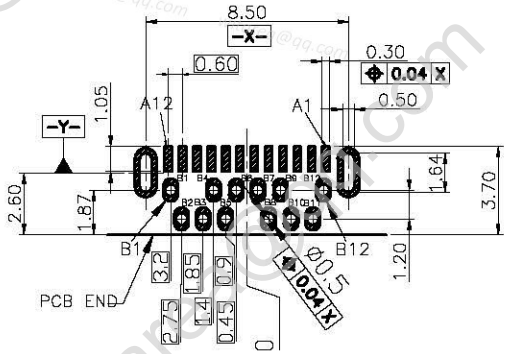

RECOMMEND P.C.B LAYOUT (THICKNESS 0.8mm)
(COMPONENT SIDE) TOLERANCE±0.03mm

PIN DEFINITION:

PIN No.	A1	A2	A3	A4	A5	A6	A7	A8	A9	A10	A11	A12
SIGNAL NAME	GND	TX1+	TX1-	VBus	CC1	D+	D-	SBU1	VBus	RX2-	RX2+	GND
PIN No.	B12	B11	B10	B9	B8	B7	B6	B5	B4	B3	B2	B1
SIGNAL NAME	GND	RX1+	RX1-	VBus	SBU2			CC2	VBus	TX2-	TX2+	GND

ITEM	NAME	QTY.	MATERIAL	DESCRIPTION
6	Shield	1	Stainless Steel SUS201	Nickel Plating
5	Housing	4	LCP UL94V-0	Color: Black
4	Latch	1	Stainless Steel SUS301 T=0.40	———
3	Contact	24	Copper Alloy C7025 T=0.15	1u"gold plated on Contact area, Matte Tin plated on Soldertails, Nickel underplating over all
2	Emc Spring	2	Stainless Steel SUS301 T=0.10	———
1	Shell	1	Stainless Steel SUS316L T=0.15	Nickel Plating

PART NO.: SEE THE PART NUMBER CODE

DRAWN BY: ANDY YANG

CHECKED BY: JAMES XIAO

APPROVED BY: JASON ZENG

深圳市纬域科技有限公司
SHENZHEN WITAREA TECHNOLOGY CO.,LTD

GENERAL TOLERANCES	
X.XXXX	± ---
X.XXX	± 0.10
X.XX	± 0.20
X.X	± 0.30
ANGULAR	± --°

TITLE
USB4/3.1 TYPE C 24PIN SMT/DIP HYBRID MALE PLUG, MID-MOUNT, OFFSET=0.95MM, Dual ROW DIP SINGLE ROW SMT,CH=0.25MM,H=11.2MM L=14.65MM

UNIT	SCALE	SHEET NO.	DWG.NO.
mm	1:1	1 OF 1	W0025-24-MM3-S3

WO Notch

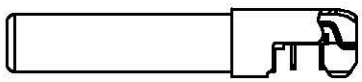

W Notch

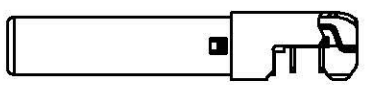

witarea@qq.com